Work Order ID 58660

Thursday, May 13, 2010 10:26:51 AM

Item ID: D3913-041 **Accept** **Setup Start**

Revision ID:

Item Name: Long Basket Base Assemby, 350 **Stop**

Start Date: 5/13/2010 **Start Qty:** 1.00 **Cust Item ID:**

Required Date: 5/19/2010 **Req'd Qty:** 1.00 **Customer:**

Reference:

Approvals: **Process Plan:** mf **Date:** 10-5-13 **Tooling:** **Date:** **Run Start**

QC: **Date:** **SPC (Y/N):** **Date:** **Stop**

Sequence ID/ Work Center ID	Operation Description	Set Up/ Run Hours	Draw Number	Draw Rev.	Plan Code	Accept Qty	Reject Qty	Reject Number	Insp. Stamp
Draw Nbr	**Revision Nbr**								
D3913	A								
100 Large Fab	Weld per dwg A/R S.S. rod Batch: M113328 Large Fab	0.00							
	Memo	0.00							
110 QC Quality Control	QC9- Inspect visual per QSI004- Fusion Welds	0.00							
	Memo	0.00							

1- assemble ribs , weld as per dwg D3913 using DT9610A
inspect before welding mesh
2- tack weld mesh on basket as per dwg D3913 and trim mesh to fit
3- weld hinge (3) and Mounting brackets as per dwg D3913
take lid to locate hinge and bracket

SY 10/05/25 (1x)

BD 10.05.25

Dart Aerospace Ltd

W/O:		WORK ORDER CHANGES					
DATE	STEP	PROCEDURE CHANGE	By	Date	Qty	Approval Chief Eng / Prod Mgr	Approval QC Inspector

Part No: _____ PAR #: _____ Fault Category: _____ NCR: Yes No DQA: _____ Date: _____

Resolution: _____ Disposition: _____ QA: N/C Closed: _____ Date: _____

NCR:		WORK ORDER NON-CONFORMANCE (NCR)						
DATE	STEP	Description of NC Section A	Corrective Action Section B			Verification Section C	Approval Chief Eng	Approval QC Inspector
			Initial Chief Eng	Action Description Chief Eng	Sign & Date			

NOTE: Date & initial all entries

H:\fFORMS\Quality Assurance\approved QA\NCRWO RevE

Work Order ID 58660

Thursday, May 13, 2010 10:26:51 AM

Item ID: D3913-041 **Accept** **Setup Start**

Revision ID:

Item Name: Long Basket Base Assemby, 350 **Stop**

Start Date: 5/13/2010 **Start Qty:** 1.00 **Cust Item ID:**

Required Date: 5/19/2010 **Req'd Qty:** 1.00 **Customer:**

Reference:

Approvals: **Process Plan:** _____ **Date:** _____ **Tooling:** _____ **Date:** _____ **Run Start**

QC: _____ **Date:** _____ **SPC (Y/N):** _____ **Date:** _____ **Stop**

Sequence ID/ Work Center ID	Operation Description	Set Up/ Run Hours	Draw Number	Draw Rev.	Plan Code	Accept Qty	Reject Qty	Reject Number	Insp. Stamp
120	QC5- Inspect part completeness to step on W/O	0.00							
QC									
Quality Control	**Memo**	0.00							
130	White Gloss(Ref:4.3.5.2) per QSI005 4.3-Steel	0.00							
Powdercoat									
Powder Coating	**Memo**	0.00							

Plug holes and mask only interior of hinge (3) prior to powder coat

1ST COAT:
START TIME:
OVEN TEMPERATURE:
FINISH TIME:
********** 2nd coat if necessary**********
2ND COAT:
START TIME:
OVEN TEMPERATURE:
FINISH TIME:

Dart Aerospace Ltd

W/O:		WORK ORDER CHANGES					
DATE	STEP	PROCEDURE CHANGE	By	Date	Qty	Approval Chief Eng / Prod Mgr	Approval QC Inspector

Part No: _____ PAR #: _____ Fault Category: _____ NCR: Yes No DQA: _____ Date: _____

Resolution: _____ Disposition: _____ QA: N/C Closed: _____ Date: _____

NCR:		WORK ORDER NON-CONFORMANCE (NCR)						
DATE	STEP	Description of NC Section A	Corrective Action Section B			Verification Section C	Approval Chief Eng	Approval QC Inspector
			Initial Chief Eng	Action Description Chief Eng	Sign & Date			

NOTE: Date & initial all entries

H:\fFORMS\Quality Assurance\approved QA\NCRWO RevE

Work Order ID 58660

Thursday, May 13, 2010 10:26:51 AM

Item ID: D3913-041 **Accept** **Setup Start**

Revision ID:

Item Name: Long Basket Base Assemby, 350 **Stop**

Start Date: 5/13/2010 **Start Qty:** 1.00 **Cust Item ID:**

Required Date: 5/19/2010 **Req'd Qty:** 1.00 **Customer:**

Reference:

Approvals: **Process Plan:** _____ **Date:** _____ **Tooling:** _____ **Date:** _____ **Run Start**

QC: _____ **Date:** _____ **SPC (Y/N):** _____ **Date:** _____ **Stop**

Sequence ID/ Work Center ID	Operation Description	Set Up/ Run Hours	Draw Number	Draw Rev.	Plan Code	Accept Qty	Reject Qty	Reject Number	Insp. Stamp
140	QC3- Inspect Part Finish	0.00							
QC	**Memo**	0.00							
Quality Control									
150	Assemble as per dwg	0.00							
HandFinish	**Memo**	0.00							
Hand Finishing	Pick Kit								
160	QC5- Inspect part completeness to step on W/O	0.00							
QC	**Memo**	0.00							
Quality Control									

Dart Aerospace Ltd

W/O:		WORK ORDER CHANGES					
DATE	STEP	PROCEDURE CHANGE	By	Date	Qty	Approval Chief Eng / Prod Mgr	Approval QC Inspector

Part No: _____ PAR #: _____ Fault Category: _____ NCR: Yes No DQA: _____ Date: _____

Resolution: _____ Disposition: _____ QA: N/C Closed: _____ Date: _____

NCR:		WORK ORDER NON-CONFORMANCE (NCR)						
DATE	STEP	Description of NC Section A	Corrective Action Section B			Verification Section C	Approval Chief Eng	Approval QC Inspector
			Initial Chief Eng	Action Description Chief Eng	Sign & Date			

NOTE: Date & initial all entries

H:\FORMS\Quality Assurance\approved QA\NCRWO RevE

Work Order ID 58660

Thursday, May 13, 2010 10:26:51 AM

Item ID: D3913-041

Revision ID:

Item Name: Long Basket Base Assemby, 350

Start Date: 5/13/2010 **Start Qty:** 1.00

Required Date: 5/19/2010 **Req'd Qty:** 1.00

Reference:

Accept

Setup Start

Stop

Cust Item ID:

Customer:

Approvals: **Process Plan:** _____ **Date:** _____ **Tooling:** _____ **Date:** _____

QC: _____ **Date:** _____ **SPC (Y/N):** _____ **Date:** _____

Run Start

Stop

Sequence ID/ Work Center ID	Operation Description	Set Up/ Run Hours	Draw Number	Draw Rev.	Plan Code	Accept Qty	Reject Qty	Reject Number	Insp. Stamp
170	Identify as per dwg & Stock Location: 6-A w/o B58777	0.00							
Packaging	Memo	0.00							
Packaging									
180	QC21- Final Inspection - Work Order Release	0.00							
QC	Memo	0.00							
Quality Control									

10/05/26

10/05/26

CL 10/5/26

Dart Aerospace Ltd

W/O:		WORK ORDER CHANGES					
DATE	STEP	PROCEDURE CHANGE	By	Date	Qty	Approval Chief Eng / Prod Mgr	Approval QC Inspector

Part No: _____ PAR #: _____ Fault Category: _____ NCR: Yes No DQA: _____ Date: _____

Resolution: _____ Disposition: _____ QA: N/C Closed: _____ Date: _____

NCR:		WORK ORDER NON-CONFORMANCE (NCR)						
DATE	STEP	Description of NC Section A	Corrective Action Section B			Verification Section C	Approval Chief Eng	Approval QC Inspector
			Initial Chief Eng	Action Description Chief Eng	Sign & Date			

NOTE: Date & initial all entries

H:\FORMS\Quality Assurance\approved QA\NCRWO RevE

Picklist Print

Thursday, May 13, 2010 10:26:48 AM

Work Order ID: 58660

Parent Item: D3913-041

Parent Item Name: Long Basket Base Assemby, 350

Start Date: 5/13/2010 **Required Date:** 5/19/2010

Comments: IPP Rev:A new issue DD 10.03.19 verified by:EC IPP Rev:B
chg qty's DD 10.04.12 verified by:EC

Start Qty: 1.00 **Required Qty:** 1.00

Component Item ID/ Item Name	Replacement Item ID	Mfg/ Purch	Bin Item	Primary Location	Last Location	Route Seq ID	Unit of Measure	Qty on Hand	Qty per Kit	Qty Issued	Date Issued	Status
AN3-10A Bolt		Purchased	No			150	Each	88.0000	6			
				Location		**Loc Qty**		**Loc Code**				
				ST351		88						
					114330	88				6	SB 10/05/26 ①	
AN960JD8 HAS 1149 ON 832T Per QSI 017 Washer		Purchased	No			150	Each	0.0000	2			
						4 114740				2	SB 10/05/26 ①	
D2581 Mounting Bracket		Manufactured	No			100	Each	36.0000	2			
				Location		**Loc Qty**		**Loc Code**				
				WA		36						
					46086	2						
					51745	2						
					57185	9					SB 10/05/26 ①	
					58301	23				②		
D2931 Bumper		Manufactured	No			150	Each	864.0000	2			
				Location		**Loc Qty**		**Loc Code**				
				ST504		864						
					46064	864				2	SB 10/05/26 ①	
D3913-1 Rib		Manufactured	No			100	Each	1.0000	1			
										B 58077 ①	SB 10/05/10	
				Location		**Loc Qty**		**Loc Code**				
				WA		1						
					58124	1						

Dart Aerospace Ltd

W/O:		WORK ORDER CHANGES					
DATE	STEP	PROCEDURE CHANGE	By	Date	Qty	Approval Chief Eng / Prod Mgr	Approval QC Inspector

Part No: _____ **PAR #:** _____ **Fault Category:** _____ **NCR:** Yes No **DQA:** _____ **Date:** _____

Resolution: _____ **Disposition:** _____ **QA: N/C Closed:** _____ **Date:** _____

NCR:		WORK ORDER NON-CONFORMANCE (NCR)						
DATE	STEP	Description of NC Section A	Corrective Action Section B			Verification Section C	Approval Chief Eng	Approval QC Inspector
			Initial Chief Eng	Action Description Chief Eng	Sign & Date			

NOTE: Date & initial all entries

H:\fFORMS\Quality Assurance\approved QA\NCRWO RevE

Picklist Print

Thursday, May 13, 2010 10:26:49 AM

Work Order ID: 58660

Parent Item: D3913-041

Parent Item Name: Long Basket Base Assemby, 350

Start Date: 5/13/2010 **Required Date:** 5/19/2010

Comments: IPP Rev:A new issue DD 10.03.19 verified by:EC IPP Rev:B
chg qty's DD 10.04.12 verified by:EC

Start Qty: 1.00 **Required Qty:** 1.00

Component Item ID/ Item Name	Replacement Item ID	Mfg/ Purch	Bin Item	Primary Location	Last Location	Route Seq ID	Unit of Measure	Qty on Hand	Qty per Kit	Qty Issued	Date Issued	Status
D3913-15		Manufactured	No			100	Each	11.0000	1		10/05/18	
Wide Handle Plate												
				Location			**Loc Qty**		**Loc Code**			
				WA			11					
					58125		11			1		
D3913-3		Manufactured	No			100	Each	2.0000	1			
Rib										B58578 1	10/05/18	
				Location			**Loc Qty**		**Loc Code**			
				WA			2					
					58126		2					
D3913-7		Manufactured	No			100	Each	2.0000	2			
Rib										B58579 2	10/05/18	
				Location			**Loc Qty**		**Loc Code**			
				WA			2					
					58127		2					
D3913-9		Manufactured	No			100	Each	2.0000	1			
Hinge Rib											10/05/18	
				Location			**Loc Qty**		**Loc Code**			
				WA			2					
					58128		2			1		

Dart Aerospace Ltd

W/O:		WORK ORDER CHANGES					
DATE	STEP	PROCEDURE CHANGE	By	Date	Qty	Approval Chief Eng / Prod Mgr	Approval QC Inspector

Part No: _____ PAR #: _____ Fault Category: _____ NCR: Yes No DQA: _____ Date: _____

Resolution: _____ Disposition: _____ QA: N/C Closed: _____ Date: _____

NCR:		WORK ORDER NON-CONFORMANCE (NCR)						
DATE	STEP	Description of NC Section A	Corrective Action Section B			Verification Section C	Approval Chief Eng	Approval QC Inspector
			Initial Chief Eng	Action Description Chief Eng	Sign & Date			

NOTE: Date & initial all entries

H:\fFORMS\Quality Assurance\approved QA\NCRWO RevE

Picklist Print

Thursday, May 13, 2010 10:26:49 AM

Work Order ID: 58660

Parent Item: D3913-041

Parent Item Name: Long Basket Base Assemby, 350

Start Date: 5/13/2010 **Required Date:** 5/19/2010

Comments: IPP Rev:A new issue DD 10.03.19 verified by:EC IPP Rev:B
chg qty's DD 10.04.12 verified by:EC

Start Qty: 1.00 **Required Qty:** 1.00

Component Item ID/ Item Name	Replacement Item ID	Mfg/ Purch	Bin Item	Primary Location	Last Location	Route Seq ID	Unit of Measure	Qty on Hand	Qty per Kit	Qty Issued	Date Issued	Status
D3916-041 Rib Assembly		Manufactured	No			100	Each	2.0000	2	B58482 ②	SG 10/05/18	
				Location		**Loc Qty**		**Loc Code**				
				WA		2						
					58357	2						
D3916-5 Light Rib		Manufactured	No			100	Each	14.0000	3		SG 10/05/18	
				Location		**Loc Qty**		**Loc Code**				
				WA		14						
					57023	2						
					57982	9				③		
					58360	3						
D4016-1 Hinge Half, Base		Manufactured	No			100	Each	9.0000	3		SG 10/05/18	
				Location		**Loc Qty**		**Loc Code**				
				WA		9						
					58132	9				③		
D4017-7 Rib		Manufactured	No			100	Each	4.0000	1		SG 10/05/18	
				Location		**Loc Qty**		**Loc Code**				
				WA		4						
					57989	2				①		
					58133	2						

Dart Aerospace Ltd

W/O:		WORK ORDER CHANGES					
DATE	STEP	PROCEDURE CHANGE	By	Date	Qty	Approval Chief Eng / Prod Mgr	Approval QC Inspector

Part No: _____ PAR #: _____ Fault Category: _____ NCR: Yes No DQA: _____ Date: _____

Resolution: _____ Disposition: _____ QA: N/C Closed: _____ Date: _____

NCR:		WORK ORDER NON-CONFORMANCE (NCR)						
DATE	STEP	Description of NC Section A	Corrective Action Section B			Verification Section C	Approval Chief Eng	Approval QC Inspector
			Initial Chief Eng	Action Description Chief Eng	Sign & Date			

NOTE: Date & initial all entries

H:\fFORMS\Quality Assurance\approved QA\NCRWO RevE

Picklist Print

Thursday, May 13, 2010 10:26:49 AM

Work Order ID: 58660

Parent Item: D3913-041

Parent Item Name: Long Basket Base Assemby, 350

Start Date: 5/13/2010 **Required Date:** 5/19/2010

Comments: IPP Rev:A new issue DD 10.03.19 verified by:EC IPP Rev:B
chg qty's DD 10.04.12 verified by:EC

Start Qty: 1.00 **Required Qty:** 1.00

Component Item ID/ Item Name	Replacement Item ID	Mfg/ Purch	Bin Item	Primary Location	Last Location	Route Seq ID	Unit of Measure	Qty on Hand	Qty per Kit	Qty Issued	Date Issued	Status
D4017-9		Manufactured	No			100	Each	8.0000	2			
Rib										SM	10/05/18	
				Location		**Loc Qty**		**Loc Code**				
				WA		8						
					58134	2						
					58415	6				2		
D4020-1		Manufactured	No			100	Each	0.0000	1			
Mesh (350 Basket Long, Base)						B58416				SAD	10-05-19	
D4020-11		Manufactured	No			100	Each	14.0000	2			
End Mesh, Basket						B58136				SAD	10-05-19	
				Location		**Loc Qty**		**Loc Code**				
				WA		14						
					56990	1						
					58136	13						
D4021-1		Manufactured	No			100	Each	10.0000	3			
Handle Plate										B58525 3	SM	10/05/18
				Location		**Loc Qty**		**Loc Code**				
				ST109		5						
					57086	5						
				WA		5						
					58139	5						

Dart Aerospace Ltd

W/O:		WORK ORDER CHANGES					
DATE	STEP	PROCEDURE CHANGE	By	Date	Qty	Approval Chief Eng / Prod Mgr	Approval QC Inspector

Part No: _____ PAR #: _____ Fault Category: _____ NCR: Yes No DQA: _____ Date: _____

Resolution: _____ Disposition: _____ QA: N/C Closed: _____ Date: _____

NCR:		WORK ORDER NON-CONFORMANCE (NCR)						
DATE	STEP	Description of NC Section A	Corrective Action Section B			Verification Section C	Approval Chief Eng	Approval QC Inspector
			Initial Chief Eng	Action Description Chief Eng	Sign & Date			

NOTE: Date & initial all entries

H:\FORMS\Quality Assurance\approved QA\NCRWO RevE

Picklist Print

Thursday, May 13, 2010 10:26:49 AM

Work Order ID: 58660

Parent Item: D3913-041

Parent Item Name: Long Basket Base Assemby, 350

Start Date: 5/13/2010 **Required Date:** 5/19/2010

Comments: IPP Rev:A new issue DD 10.03.19 verified by:EC IPP Rev:B
chg qty's DD 10.04.12 verified by:EC

Start Qty: 1.00 **Required Qty:** 1.00

Component Item ID/ Item Name	Replacement Item ID	Mfg/ Purch	Bin Item	Primary Location	Last Location	Route Seq ID	Unit of Measure	Qty on Hand	Qty per Kit	Qty Issued	Date Issued	Status
D4021-5		Manufactured	No			150	Each	13.0000	2			
Blanking Plate												
				Location			**Loc Qty**		**Loc Code**			
				ST109			13					
					58140		13			2	Sb 10/05/26	①
D4034-041		Manufactured	No			100	Each	5.0000	1			
Aft Upper Rib Assembly											DJ 10/05/18	
				Location			**Loc Qty**		**Loc Code**			
				WA			5					
					58141		5			①		
D4034-043		Manufactured	No			100	Each	5.0000	1			
Fwd Upper Rib Assembly											DJ 10/05/18	
				Location			**Loc Qty**		**Loc Code**			
				WA			5					
					58142		5			②		
MS20600-AD4W3		Purchased	No			150	Each	1,825.000	2			
Cherry Rivets												
				Location			**Loc Qty**		**Loc Code**			
				ST321			1825					
					106375		3					
					107939		822				Sb 10/05/26	①
					111636		1000			2		

Dart Aerospace Ltd

W/O:		WORK ORDER CHANGES					
DATE	STEP	PROCEDURE CHANGE	By	Date	Qty	Approval Chief Eng / Prod Mgr	Approval QC Inspector

Part No: _____ PAR #: _____ Fault Category: _____ NCR: Yes No DQA: _____ Date: _____

Resolution: _____ Disposition: _____ QA: N/C Closed: _____ Date: _____

NCR:		WORK ORDER NON-CONFORMANCE (NCR)						
DATE	STEP	Description of NC Section A	Corrective Action Section B			Verification Section C	Approval Chief Eng	Approval QC Inspector
			Initial Chief Eng	Action Description Chief Eng	Sign & Date			

.NOTE:-Date & initial all entries

H:\fFORMS\Quality Assurance\approved QA\NCRWO RevE

Picklist Print

Thursday, May 13, 2010 10:26:49 AM

Work Order ID: 58660

Parent Item: D3913-041

Parent Item Name: Long Basket Base Assemby, 350

Start Date: 5/13/2010 **Required Date:** 5/19/2010

Comments: IPP Rev:A new issue DD 10.03.19 verified by:EC IPP Rev:B
chg qty's DD 10.04.12 verified by:EC

Start Qty: 1.00 **Required Qty:** 1.00

Component Item ID/ Item Name	Replacement Item ID	Mfg/ Purch	Bin Item	Primary Location	Last Location	Route Seq ID	Unit of Measure	Qty on Hand	Qty per Kit	Qty Issued	Date Issued	Status
MS21042L3		Purchased	No			150	Each	1,561.000	6			
Nut												
				Location		**Loc Qty**		**Loc Code**				
				ST300		1561						
					113537	20						
					113644	541				6	SD 10/05/26	1
					114523	1000						
NAS1149F0332P		Purchased	No			150	Each	887.0000	12			
WASHER												
				Location		**Loc Qty**		**Loc Code**				
				ST275		887						
					18057	887				12	SD 10/05/26	1

Dart Aerospace Ltd

W/O:		WORK ORDER CHANGES					
DATE	STEP	PROCEDURE CHANGE	By	Date	Qty	Approval Chief Eng / Prod Mgr	Approval QC Inspector

Part No: _____ PAR #: _____ Fault Category: _____ NCR: Yes No DQA: _____ Date: _____

Resolution: _____ Disposition: _____ QA: N/C Closed: _____ Date: _____

NCR:		WORK ORDER NON-CONFORMANCE (NCR)						
DATE	STEP	Description of NC Section A	Corrective Action Section B			Verification Section C	Approval Chief Eng	Approval QC Inspector
			Initial Chief Eng	Action Description Chief Eng	Sign & Date			

NOTE: Date & initial all entries

H:\fFORMS\Quality Assurance\approved QA\NCRWO RevE

ITEM	QTY -041	P/N	DESCRIPTION
	X	D3913-041	LONG BASKET BASE ASSY (350)
1	1	D3913-101	TUBULAR ASSY (350 SHORT BASKET)
2	1	D3913-15	WIDE HANDLE PLATE
3	2	D2581	MOUNTING BRACKET
4	2	D2931	BUMPER
5	3	D4016-1	HINGE HALF, BASE
6	1	D4020-1	MESH (350 BASKET LONG BASE)
7	2	D4020-11	END MESH, BASKET
8	3	D4021-1	HANDLE PLATE
9	2	D4021-5	BLANKING PLATE
10	6	AN3-10A	BOLT
11	2	AN960JD8	WASHER
12	2	MS20600AD4W3	BLIND RIVET
13	6	MS21042L3	NUT
14	12	NAS1149F0332P	WASHER

#58060

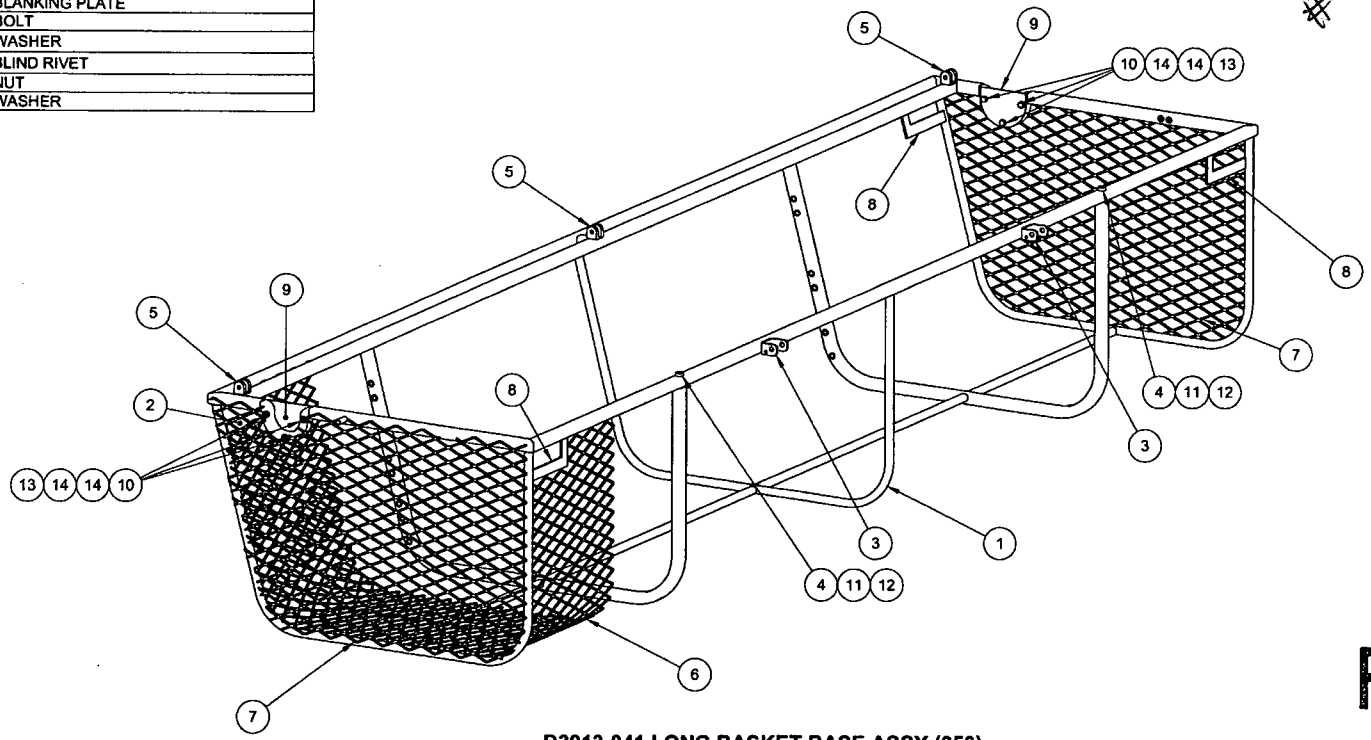

D3913-041 LONG BASKET BASE ASSY (350)
(MESH SHOWN LOCALLY FOR CLARITY)

RELEASED
2010-03-22

NOTES:
1) MATERIAL: N/A
2) FINISH: POWDER COAT WHITE (4.3.5.2) PER DART QSI 005 4.3
3) TOLERANCES: PER DART QSI 018 UNLESS OTHERWISE NOTED
4) UNITS: INCHES UNLESS OTHERWISE NOTED
5) BREAK SHARP EDGES: N/A
6) IDENTIFICATION: NONE
7) WEIGHT: 43.3 lbs APPROX
8) INSTALL AFTER FINISH
9) MASK HOLES PRIOR TO POWDER COAT
10) WELD PER DART QSI 004

REV.	DESCRIPTION	BY	DATE
A	NEW ISSUE	JPH	10.03.16

DESIGN	AJS	DART AEROSPACE LTD HAWKESBURY, ONTARIO, CANADA
DRAWN	JPH	
CHECKED		DRAWING NO. D3913 — REV. A — SHEET 1 OF 6
MFG. APPR.		
APPROVED		TITLE: LONG BASKET BASE ASSY (350) — SCALE: NTS
DE APPR.		
DATE	10.03.16	

Dart Aerospace Ltd

W/O:		WORK ORDER CHANGES					
DATE	STEP	PROCEDURE CHANGE	By	Date	Qty	Approval Chief Eng / Prod Mgr	Approval QC Inspector

Part No: _____ PAR #: _____ Fault Category: _____ NCR: Yes No DQA: _____ Date: _____

Resolution: _____ Disposition: _____ QA: N/C Closed: _____ Date: _____

NCR:		WORK ORDER NON-CONFORMANCE (NCR)						
DATE	STEP	Description of NC Section A	Corrective Action Section B			Verification Section C	Approval Chief Eng	Approval QC Inspector
			Initial Chief Eng	Action Description Chief Eng	Sign & Date			

NOTE: Date & initial all entries

H:\FORMS\Quality Assurance\approved QA\NCRWO RevE

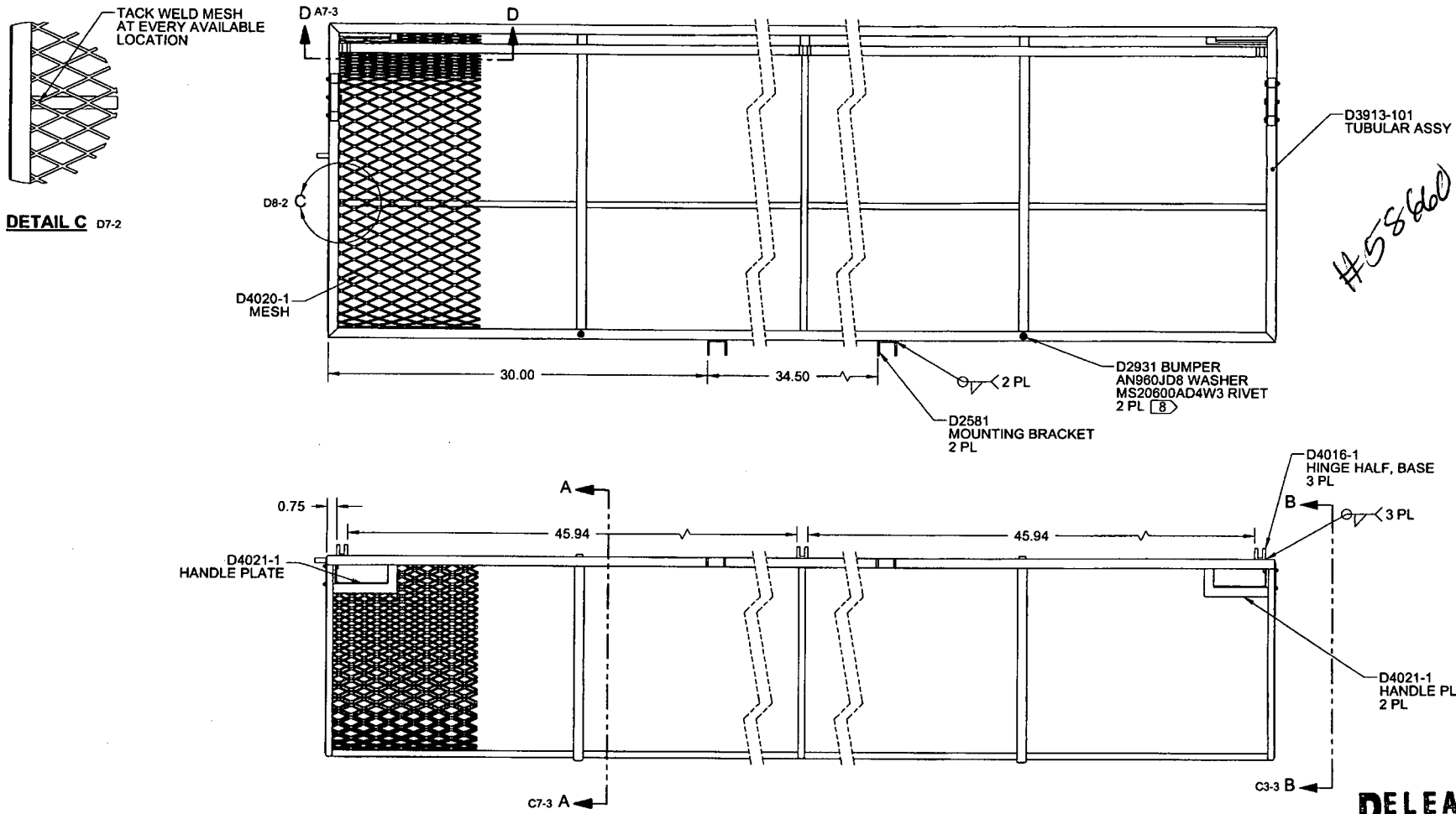

#58660

D3913-041 LONG BASKET BASE ASSY (350)
(MESH SHOWN LOCALLY FOR CLARITY)

RELEASED 2010-09-22

DESIGN	AJS	DART AEROSPACE LTD HAWKESBURY, ONTARIO, CANADA
DRAWN	JRH	
CHECKED		DRAWING NO. D3913 — REV. A — SHEET 2 OF 6
MFG. APPR.		
APPROVED		TITLE: LONG BASKET BASE ASSY (350) — SCALE: NTS
DE APPR.		
DATE	10.03.16	

Dart Aerospace Ltd

W/O:		WORK ORDER CHANGES					
DATE	STEP	PROCEDURE CHANGE	By	Date	Qty	Approval Chief Eng / Prod Mgr	Approval QC Inspector

Part No: _____ **PAR #:** _____ **Fault Category:** _____ **NCR:** Yes No **DQA:** _____ **Date:** _____

Resolution: _____ **Disposition:** _____ **QA: N/C Closed:** _____ **Date:** _____

NCR:		WORK ORDER NON-CONFORMANCE (NCR)						
DATE	STEP	Description of NC Section A	Corrective Action Section B			Verification Section C	Approval Chief Eng	Approval QC Inspector
			Initial Chief Eng	Action Description Chief Eng	Sign & Date			

NOTE: Date & initial all entries

H:\fFORMS\Quality Assurance\approved QA\NCRWO RevE

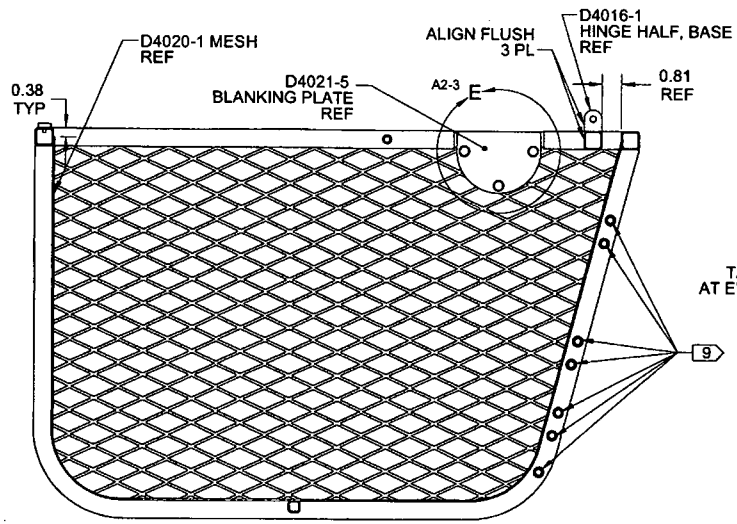

SECTION A-A A5-2

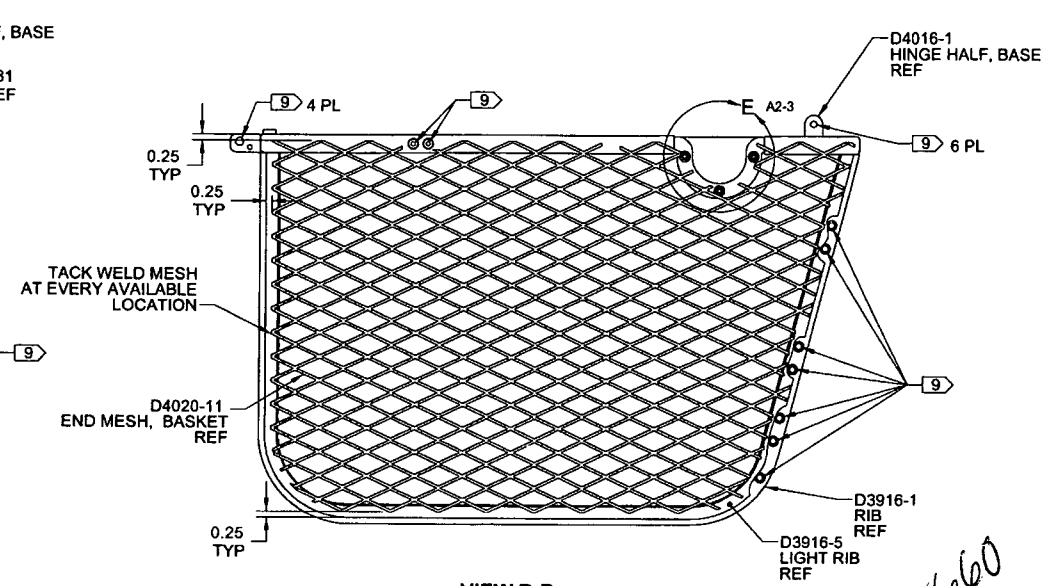

VIEW B-B A2-2

#58660

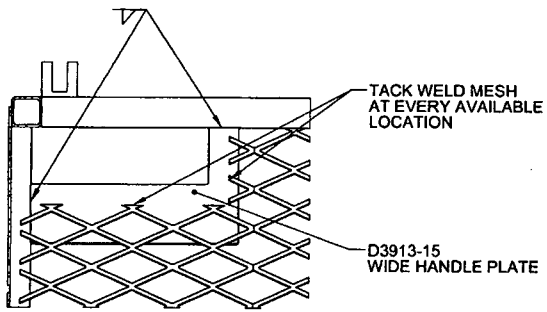

SECTION D-D D7-2
TYPICAL FOR ALL
HANDLE PLATES

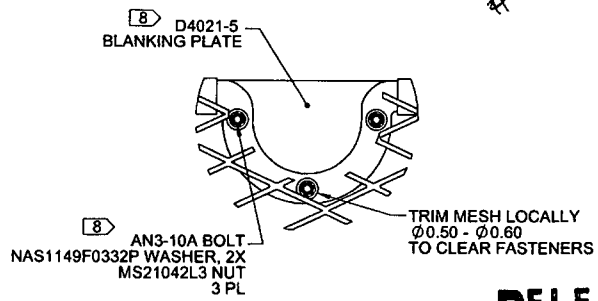

DETAIL E D2-3
D6-3

RELEASED
2010-03-22

DESIGN	AJS	**DART AEROSPACE LTD** HAWKESBURY, ONTARIO, CANADA
DRAWN	JRH	
CHECKED		DRAWING NO. D3913 — REV. A — SHEET 3 OF 6
MFG. APPR.		
APPROVED		TITLE: LONG BASKET BASE ASSY (350) — SCALE: NTS
DE APPR.		
DATE	10.03.16	

Dart Aerospace Ltd

W/O:		WORK ORDER CHANGES					
DATE	STEP	PROCEDURE CHANGE	By	Date	Qty	Approval Chief Eng / Prod Mgr	Approval QC Inspector

Part No: _____ PAR #: _____ Fault Category: _____ NCR: Yes No DQA: _____ Date: _____

Resolution: _____ Disposition: _____ QA: N/C Closed: _____ Date: _____

NCR:		WORK ORDER NON-CONFORMANCE (NCR)						
DATE	STEP	Description of NC Section A	Corrective Action Section B			Verification Section C	Approval Chief Eng	Approval QC Inspector
			Initial Chief Eng	Action Description Chief Eng	Sign & Date			

NOTE: Date & initial all entries

H:\fFORMS\Quality Assurance\approved QA\NCRWO RevE

ITEM	QTY -101	P/N	DESCRIPTION
	X	D3913-101	TUBULAR ASSY (350 LONG BASKET)
1	1	D3913-1	RIB
2	1	D3913-3	RIB
3	2	D3913-7	RIB
4	1	D3913-9	HINGE RIB
5	3	D3916-5	LIGHT RIB
6	2	D3916-041	RIB ASSY
7	1	D4017-7	RIB
8	2	D4017-9	RIB
9	1	D4034-041	AFT UPPER RIB ASSY
10	1	D4034-043	FWD UPPER RIB ASSY

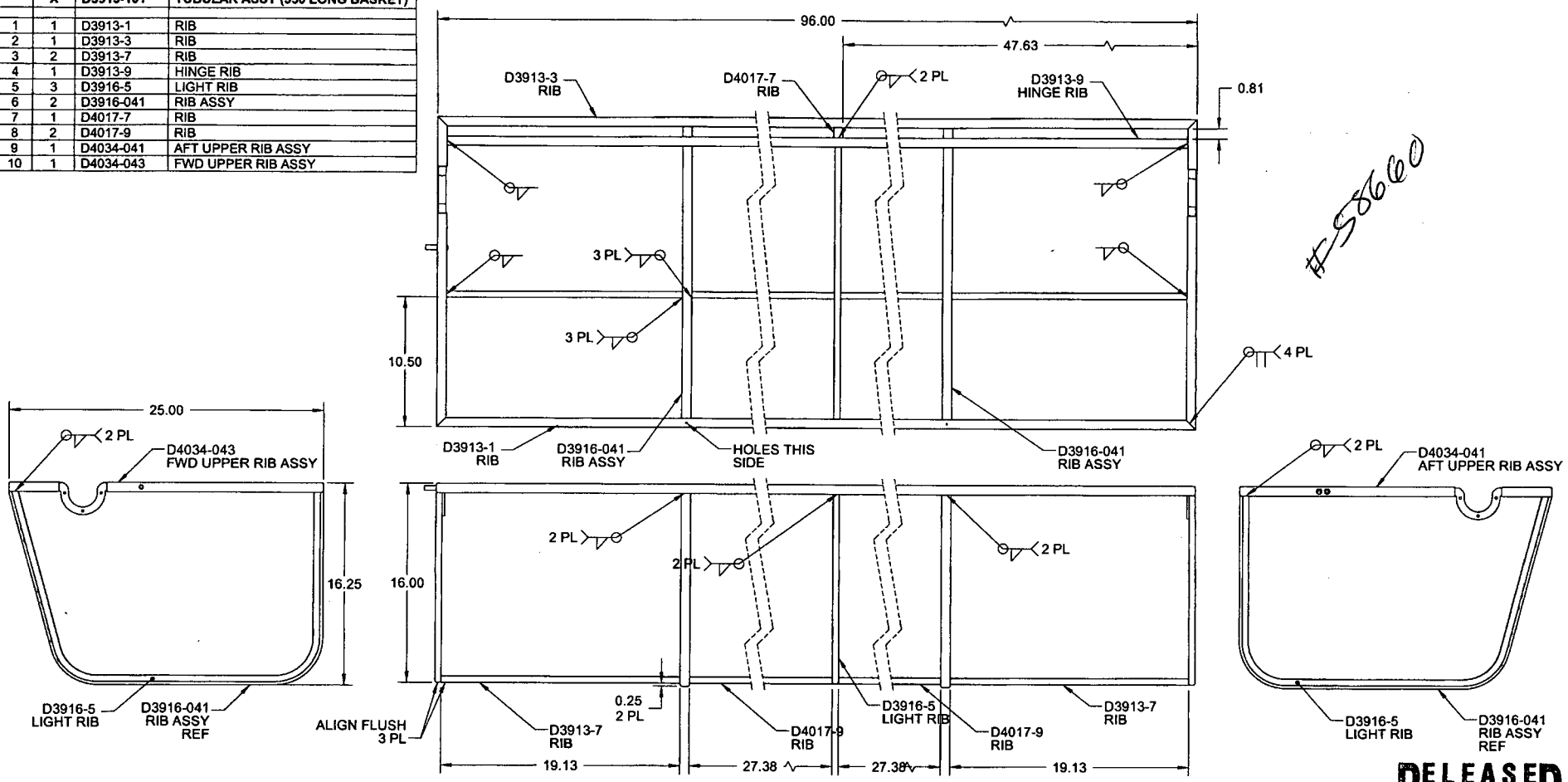

#58660

8 **D3913-101 TUBULAR ASSY (350 SHORT BASKET)**

RELEASED 2010-03-22

NOTES:
1) MATERIAL: N/A
2) FINISH: NONE
3) TOLERANCES: PER DART QSI 018 UNLESS OTHERWISE NOTED
4) UNITS: INCHES UNLESS OTHERWISE NOTED
5) BREAK SHARP EDGES: 0.005 TO 0.010 MAX
6) IDENTIFICATION: N/A
7) WEIGHT: 22.53 lbs
8) TOLERANCE FOR XX.XX DIMENSIONS ±0.06 FOR D3913-101
9) WELD PER DART QSI 004

DESIGN	AJS	DART AEROSPACE LTD HAWKESBURY, ONTARIO, CANADA
DRAWN	JRH	
CHECKED		DRAWING NO. D3913 — REV. A — SHEET 4 OF 6
MFG. APPR.		
APPROVED		TITLE: LONG BASKET BASE ASSY (350) — SCALE: NTS
DE APPR.		
DATE	10.03.16	

Dart Aerospace Ltd

W/O:		WORK ORDER CHANGES					
DATE	STEP	PROCEDURE CHANGE	By	Date	Qty	Approval Chief Eng / Prod Mgr	Approval QC Inspector

Part No: _____ PAR #: _____ Fault Category: _____ NCR: Yes No DQA: _____ Date: _____

Resolution: _____ Disposition: _____ QA: N/C Closed: _____ Date: _____

NCR:		WORK ORDER NON-CONFORMANCE (NCR)						
DATE	STEP	Description of NC Section A	Corrective Action Section B			Verification Section C	Approval Chief Eng	Approval QC Inspector
			Initial Chief Eng	Action Description Chief Eng	Sign & Date			

NOTE: Date & initial all entries

H:\FORMS\Quality Assurance\approved QA\NCRWO RevE

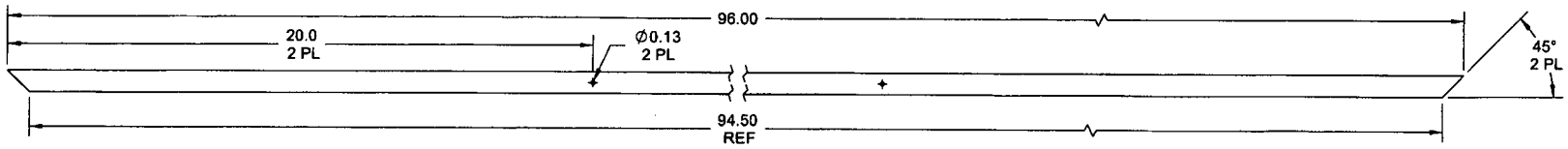

D3913-1 RIB

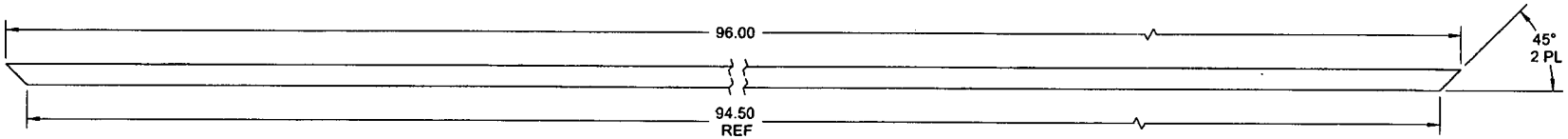

D3913-3 RIB

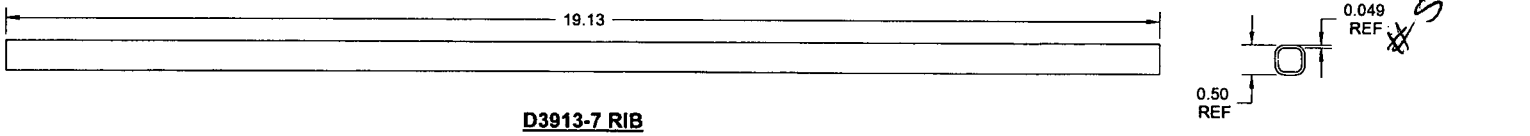

#58660

D3913-7 RIB

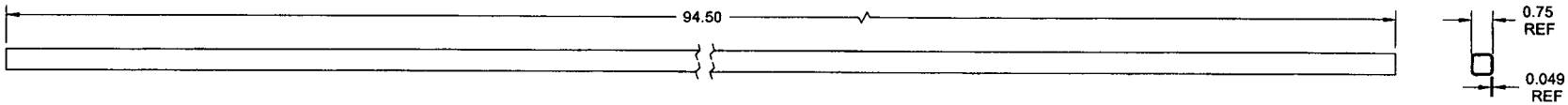

D3913-9 HINGE RIB

NOTES:
1) MATERIAL -1, -3, -9: AISI 304/316 STAINLESS STEEL SQUARE TUBE, 0.75 X 0.75 X 0.049 WALL
REF DART SPEC. M304TS0.750W.049

-7: AISI 304/316 STAINLESS STEEL SQUARE TUBE, 0.50 X 0.50 X 0.049 WALL
REF DART SPEC. M304TS0.500W.049

2) FINISH: NONE
3) TOLERANCES: PER DART QSI 018 UNLESS OTHERWISE NOTED
4) UNITS: INCHES UNLESS OTHERWISE NOTED
5) BREAK SHARP EDGES: 0.005 TO 0.010 MAX
6) IDENTIFICATION: N/A
7) WEIGHT: SEE ASSEMBLED WEIGHTS

RELEASED
2010 -03- 2 2

DESIGN	AJS	DART AEROSPACE LTD HAWKESBURY, ONTARIO, CANADA
DRAWN	JPH	
CHECKED		DRAWING NO. D3913 — REV. A — SHEET 5 OF 6
MFG. APPR.		
APPROVED		TITLE: LONG BASKET BASE ASSY (350) — SCALE: NTS
DE APPR.		
DATE	10.03.16	

Dart Aerospace Ltd

W/O:		WORK ORDER CHANGES					
DATE	STEP	PROCEDURE CHANGE	By	Date	Qty	Approval Chief Eng / Prod Mgr	Approval QC Inspector

Part No: _____ PAR #: _____ Fault Category: _____ NCR: Yes No DQA: _____ Date: _____

Resolution: _____ Disposition: _____ QA: N/C Closed: _____ Date: _____

NCR:		WORK ORDER NON-CONFORMANCE (NCR)						
DATE	STEP	Description of NC Section A	Corrective Action Section B			Verification Section C	Approval Chief Eng	Approval QC Inspector
			Initial Chief Eng	Action Description Chief Eng	Sign & Date			

NOTE: Date & initial all entries

H:\fFORMS\Quality Assurance\approved QA\NCRWO RevE

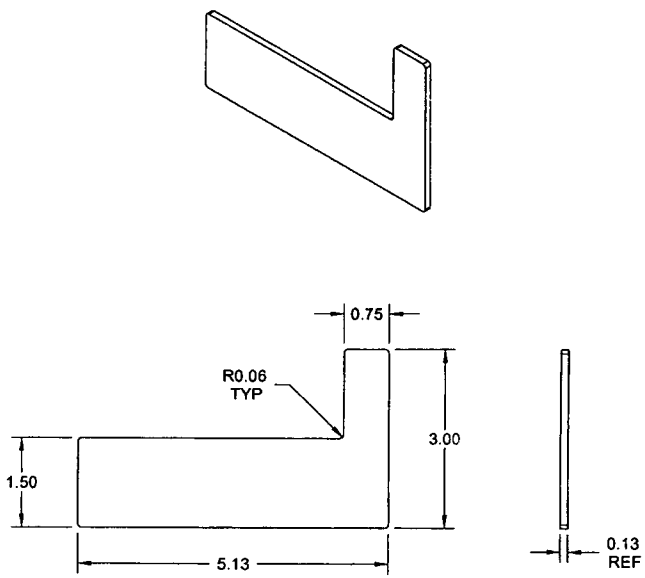

D3913-15 WIDE HANDLE PLATE

#58660

RELEASED
2010 -03- 22

NOTES:
1) MATERIAL: 304/316 STAINLESS STEEL SHEET ANNEALED 2B FINISH,
PER MIL-S-5059 OR AMS 5513/5524 OR ASTM A240 OR ASME SA240
REF DART SPEC M304S11GA
2) FINISH : NONE
3) TOLERANCES: PER DART QSI 018 UNLESS OTHERWISE NOTED
4) UNITS: INCHES UNLESS OTHERWISE NOTED
5) BREAK SHARP EDGES: 0.005 TO 0.010 MAX
6) IDENTIFICATION: N/A
7) WEIGHT: 0.31 lbs

DESIGN	AJS	**DART AEROSPACE LTD** HAWKESBURY, ONTARIO, CANADA
DRAWN	JRH	
CHECKED		DRAWING NO. D3913 — REV. A — SHEET 6 OF 6
MFG. APPR.		
APPROVED		TITLE: LONG BASKET BASE ASSY (350) — SCALE: NTS
DE APPR.		
DATE	10.03.16	

Dart Aerospace Ltd

W/O:		WORK ORDER CHANGES					
DATE	STEP	PROCEDURE CHANGE	By	Date	Qty	Approval Chief Eng / Prod Mgr	Approval QC Inspector

Part No: _____ PAR #: _____ Fault Category: _____ NCR: Yes No DQA: _____ Date: _____

Resolution: _____ Disposition: _____ QA: N/C Closed: _____ Date: _____

NCR:		WORK ORDER NON-CONFORMANCE (NCR)						
DATE	STEP	Description of NC Section A	Corrective Action Section B			Verification Section C	Approval Chief Eng	Approval QC Inspector
			Initial Chief Eng	Action Description Chief Eng	Sign & Date			

NOTE: Date & initial all entries

H:\fFORMS\Quality Assurance\approved QA\NCRWO RevE